UL-EU CERTIFICATE

Certificate No.	UL-EU-01265-CPR
Page	1/12
Date of Issue	2022-11-30
Certificate Holder	Tenmat Ltd Frank Perkins Way Irlam Manchester M44 5PP United Kingdom
Manufacturer	A/024 A/025
Certified Product Type	Fire Stop – Mineral Wool Board
Product Trade Name	Tenmat NVFB Non-Ventilated Fire Barrier
Trademark	N/A
Rating/Classification	See Appendix
Harmonised Technical Specifications	EAD 350141-00-1106 / EN 13501-2
Expiry date	2032-11-29

Authorized Certification Decision Maker
Chris Johnson

This is to certify that representative samples of the Certified Product listed above have been investigated by Underwriters Laboratories to the Standard(s) indicated on this Certificate, in accordance with the UL Global Services Agreement and the UL-EU Mark Service Terms and Conditions ("Agreement"). The Certificate Holder is entitled to use the UL-EU Mark for the Certified Product listed on the certificate and manufactured at the production site(s) listed, in accordance with the terms of the Agreement. Only those products bearing the UL-EU Mark for Europe should be considered as being covered by UL's UL-EU Mark Service. This Certificate shall remain valid through the Expiration date, unless a Standard identified on this Certificate is amended or withdrawn prior to that date or there is a non-compliance with the Agreement.

Appendix UL-EU CERTIFICATE

This certificate relates to the use of Tenmat NVFB Non-Ventilated Fire Barrier for fire stopping where there are joints in or between floors and walls. The detailed scope is given in pages 3 to 11 of this Certificate. This shows the thickness and acceptable dimensions, substrates and orientations required to provide fire resistance periods of up to 120 minutes (EI 120).

The product is certificated on the basis of:

i) Inspection and surveillance of factory production control by UL
ii) Fire resistance test data in accordance with EN 1366-4: 2006 +A1: 2010
iii) Classification in accordance with EN 13501-2
iv) Durability and Servicability as defined in EAD 350141-00-1106

The durability class of Tenmat NVFB Non-Ventilated Fire Barrier is Z_1 - intended for use at internal conditions with high humidity, excluding temperatures below 0°C

Appendix UL-EU CERTIFICATE

Product-type: Mineral Wool Board	Intended use: Penetration Seal	
Assessment method	Essential characteristic	Product Performance
BWR 2 Safety in case of fire		
EN 13501-1	Reaction to fire	No performance determined
EN 13501-2	Resistance to fire	See pages 4-11
BWR 3 Hygiene, health and environment		
EN 1026	Air permeability	No performance determined
EAD 350454-00-1104, Annex C	Water permeability	No performance determined
Declaration of manufacturer & EN 16516	Release of dangerous substances	Declaration of manufacturer
BWR 4 Safety in use		
EOTA TR 001:2003	Mechanical resistance and stability	No performance determined
EOTA TR 001:2003	Resistance to impact/movement	No performance determined
EOTA TR 001:2003	Adhesion	No performance determined
EAD 350454-00-1104, Clause 2.2.12	Durability	Z_1
BWR 5 Protection against noise		
EN 10140-1,2,4,5/ EN ISO 717-1	Airborne sound insulation	No performance determined
BWR 6 Energy economy and heat retention		
EN 12664, EN 12667, EN 12939, EN ISO 8990, EN ISO 6946, EN ISO 14683, EN ISO 10211, EN ISO 10456	Thermal properties	No performance determined
EN ISO 12572, EN 12086, EN ISO 10456	Water vapour permeability	No performance determined

Appendix UL-EU CERTIFICATE

Certificate No. UL-EU-01265-CPR
Page 4/12
Date of Issue 2022-11-30

Vertical linear joint or gap seals with 1 x 100 mm thick Tenmat NVFB Non-Ventilated Fire Barrier, between rigid wall constructions with thickness of minimum 100 mm

Joint System: Tenmat NVFB Non-Ventilated Fire Barrier compress fitted and flush to both faces of the wall

Construction details:

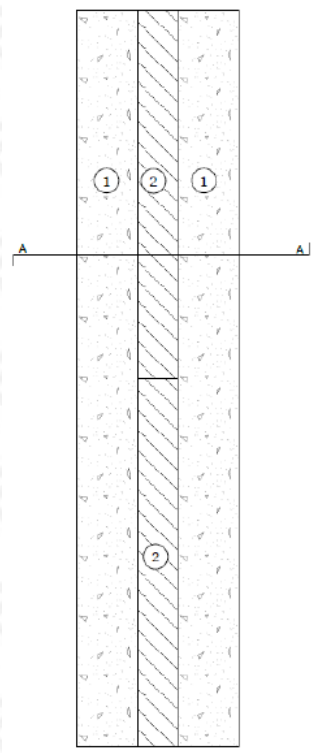

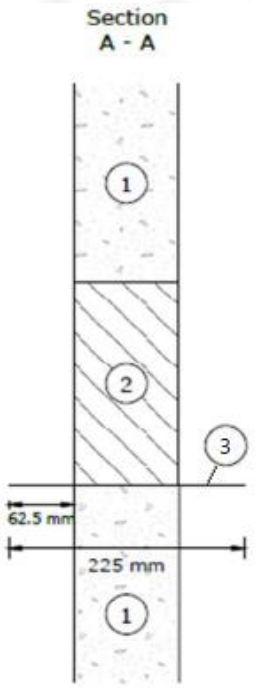

1. 100 mm leightweight rigid wall
2. Tenmat NVFB Non-Ventilated Fire Barrier
3. 225 mm Damp Proof Course (DPC) bonded centrally

Substrate	Min. Depth (mm)	Seal Material*	Classification
Masonry / concrete	100	Stone mineral wool 110kg/m^3, compress fitted by approximately 5 mm. With or without DPC	EI 120 – V – X – F – W 10 to W 200

*Minor irregularities (≤ 5 mm) on each face to be sealed with PFC Corofil Acoustic Intumescent Sealant to a min. depth of 10 mm.

Appendix UL-EU CERTIFICATE

Vertical linear joint or gap seals with 1 x 82 mm thick Tenmat NVFB Non-Ventilated Fire Barrier, installed within the cavity of rigid wall constructions with thickness of minimum 150 mm

Joint System: Tenmat NVFB Non-Ventilated Fire Barrier compress fitted within the cavity of the walls. The Tenmat NVFB Non-Ventilated Fire Barrier is retained in place using MP Brackets installed at mid depth of the barrier and fixed at maximum 500 mm centres.

Construction details:

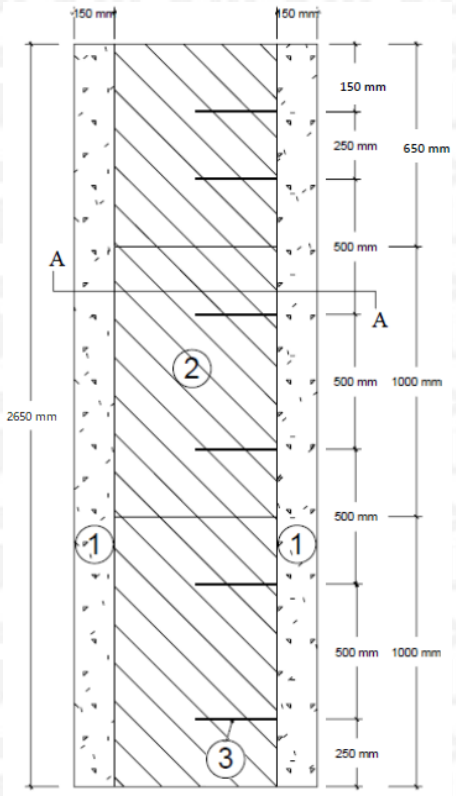

Vertical section:

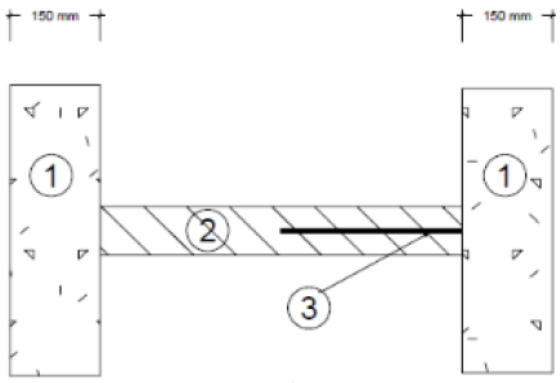

1. 100 mm leightweight concrete leaf
2. Tenmat NVFB Non-Ventilated Fire Barrier
3. Tenmat MP Bracket

Substrate	Min. Depth (mm)	Seal Material*	Classification
Masonry / concrete	82	Stone mineral wool 110kg/m^3, with or without foil facings, compress fitted by approximately 5 mm. Fixed with MP Brackets at maximum 500 mm centres. With or without DPC	E 120 – V – X – F – W 201 to W 600, EI 30 – V – X – F – W 201 to W 600

*Minor irregularities (≤ 5 mm) on each face to be sealed with PFC Corofil Acoustic Intumescent Sealant to a min. depth of 10 mm.

Appendix UL-EU CERTIFICATE

Certificate No. UL-EU-01265-CPR
Page 6/12
Date of Issue 2022-11-30

Vertical linear joint or gap seals with 1 x 82 mm thick Tenmat NVFB Non-Ventilated Fire Barrier, installed within the cavity between rigid walls with thickness of minimum 150 mm and Metsec supporting construction

Joint System: Tenmat NVFB Non-Ventilated Fire Barrier compress fitted within the cavity of the walls. The Tenmat NVFB Non-Ventilated Fire Barrier is retained in place using MP Brackets installed at mid depth of the barrier and fixed at maximum 500 mm centres.

Construction details:

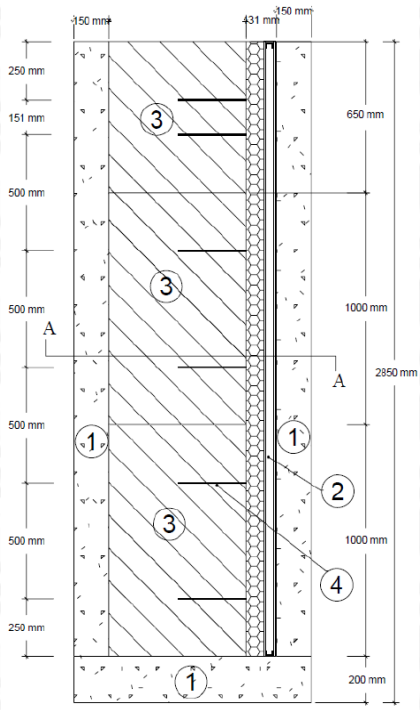

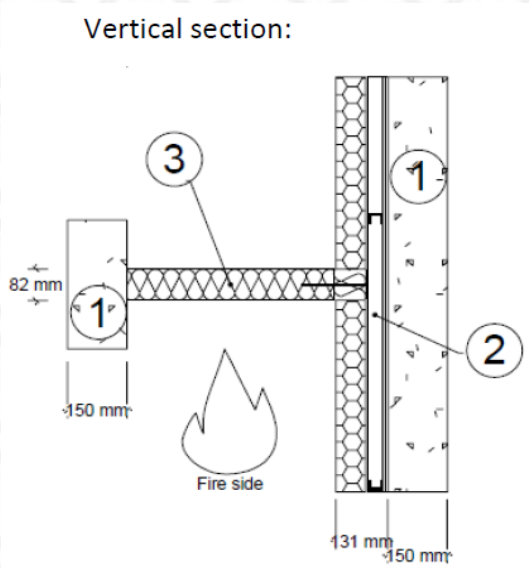

1. 100 mm leightweight concrete leaf
2. SFS system 135 mm overall thickness, comprising 90mm Metsec C stud, clad internally with 2 x 15mm Knauf Fire Panel, clad externally with 1 x 12mm RCM Y-Wall and minimum 75mm Rockwool Duo Slab
3. Tenmat NVFB Non-Ventilated Fire Barrier
4. Tenmat MP Bracket

Substrate	Min. Depth (mm)	Seal Material*	Classification
Masonry / Concrete / Metsec system	82	Stone mineral wool 110kg/m^3, with or without foil facings, compress fitted by approximately 5 mm. Fixed with MP Brackets at maximum 500 mm centres.	E 120 – V – X – F – W 10 to W 600, EI 30 – V – X – F – W 10 to W 600

*Minor irregularities (≤ 5 mm) on each face to be sealed with PFC Corofil Acoustic Intumescent Sealant to a min. depth of 10 mm.

Appendix UL-EU CERTIFICATE

Rigid floor constructions with minimum thickness of minimum 150 mm

Linear joint or gap seals with 1 x 100 mm thick Tenmat NVFB Non-Ventilated Fire Barrier

Joint System: Tenmat NVFB Non-Ventilated Fire Barrier compress fitted and flush to the bottom side of the floor

Construction details:

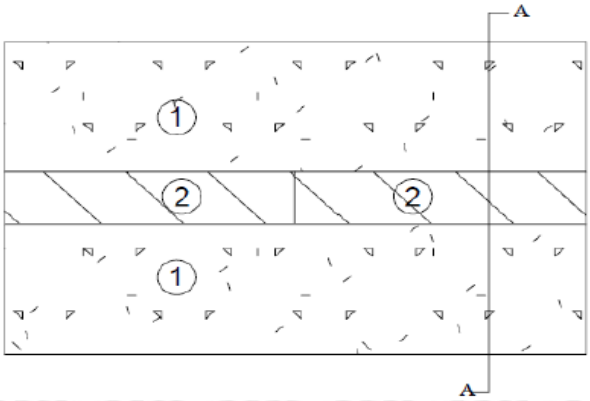

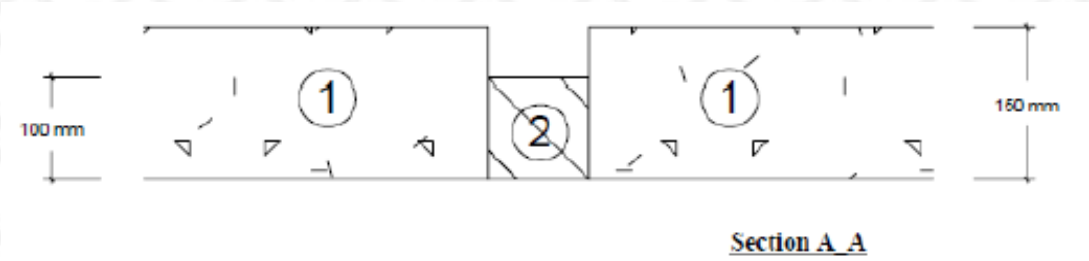

1. 150 mm leightweight rigid floor
2. Tenmat NVFB Non-Ventilated Fire Barrier

Substrate	Min. Depth (mm)	Seal Material*	Classification
Masonry / concrete	100	Stone mineral wool 110kg/m^3, compress fitted by approximately 5 mm. With or without DPC	EI 120 – H – X – F – W 10 to W 100
			E 120 – H – X – F – W 101 to W 200, EI 90 – H – X – F – W 101 to W 200

*Minor irregularities (≤ 5 mm) on each face to be sealed with PFC Corofil Acoustic Intumescent Sealant to a min. depth of 10 mm.

Appendix UL-EU CERTIFICATE

Linear joint or gap seals with 1 x 82 mm thick Tenmat NVFB Non-Ventilated Fire Barrier

Joint System: Tenmat NVFB Non-Ventilated Fire Barrier compress fitted within the aperture and flush to the bottom side of the floor. The Tenmat NVFB Non-Ventilated Fire Barrier is retained in place using MP Brackets installed at mid depth of the barrier and fixed at maximum 500 mm centres.

Construction details:

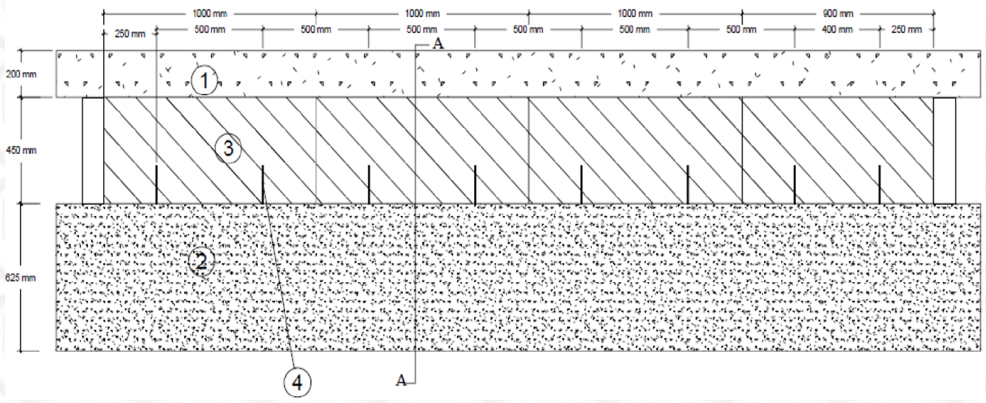

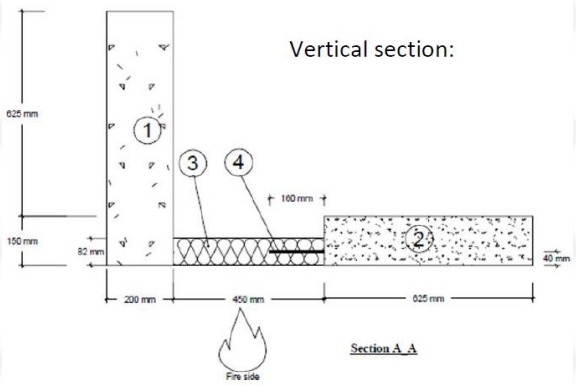

1. 600 mm x 626 mm lightweight aggregate
2. 150 mm thick lightweight concrete floor
3. Tenmat NVFB Non-Ventilated Fire Barrier
4. Tenmat MP Bracket

Substrate	Min. Depth (mm)	Seal Material*	Classification
Masonry / concrete	82	Stone mineral wool 110kg/m^3, with or without foil facings, compress fitted by approximately 5 mm. With or without DPC	E 120 – H – X – F – W 201 to W 450, EI 30 – H – X – F – W 201 to W 450

*Minor irregularities (≤ 5 mm) on each face to be sealed with PFC Corofil Acoustic Intumescent Sealant to a min. depth of 10 mm.

Appendix UL-EU CERTIFICATE

Linear joint or gap seals with 1 x 82 mm thick Tenmat NVFB Non-Ventilated Fire Barrier

Joint System: Tenmat NVFB Non-Ventilated Fire Barrier compress fitted within the aperture and flush to the bottom side of the floor. The Tenmat NVFB Non-Ventilated Fire Barrier is retained in place using MP Brackets installed at mid depth of the barrier and fixed at maximum 500 mm centres.

Construction details:

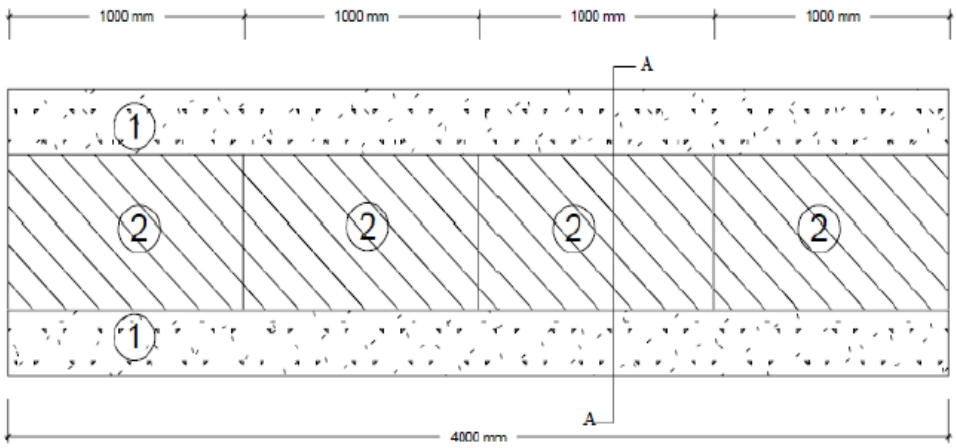

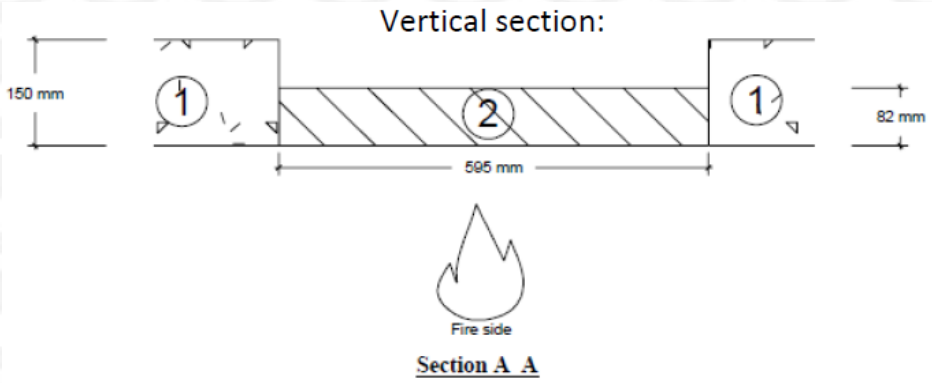

1. 150 mm thick lightweight aggregate floor
2. Tenmat NVFB Non-Ventilated Fire Barrier

Substrate	Min. Depth (mm)	Seal Material*	Classification
Masonry / concrete	82	Stone mineral wool 110kg/m^3, with or without foil facings, compress fitted by approximately 5 mm. With or without DPC	E 60 – H – X – F – W 201 to W 595, EI 30 – H – X – F – W 201 to W 595

*Minor irregularities (≤ 5 mm) on each face to be sealed with PFC Corofil Acoustic Intumescent Sealant to a min. depth of 10 mm.

Appendix UL-EU CERTIFICATE

Certificate No. UL-EU-01265-CPR
Page 10/12
Date of Issue 2022-11-30

Linear joint or gap seals with 1 x 82 mm thick Tenmat NVFB Non-Ventilated Fire Barrier

Joint System: Tenmat NVFB Non-Ventilated Fire Barrier compress fitted within the aperture and flush to the top side of the floor. The Tenmat NVFB Non-Ventilated Fire Barrier is notched around an Ancon MDC/P masonry support system at maximum 300 mm centres. Minimum gap from top of support bracket to top of masonry floor slab 28 mm.

Construction details:

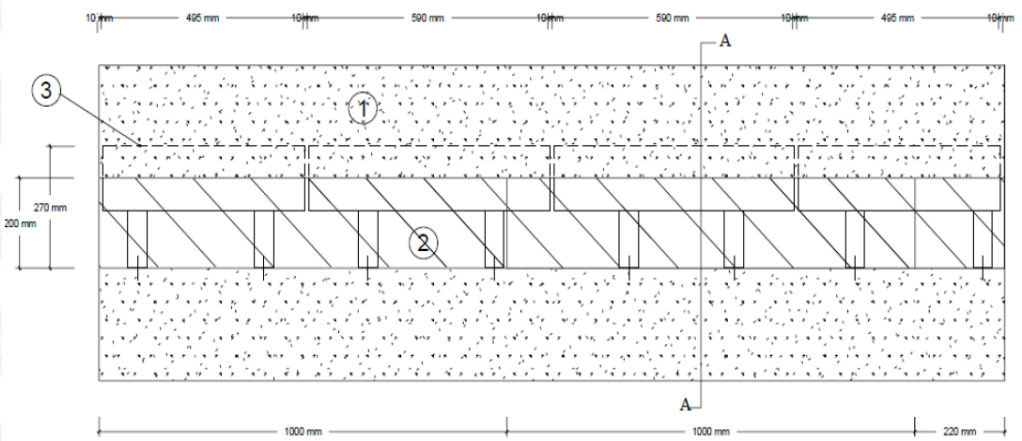

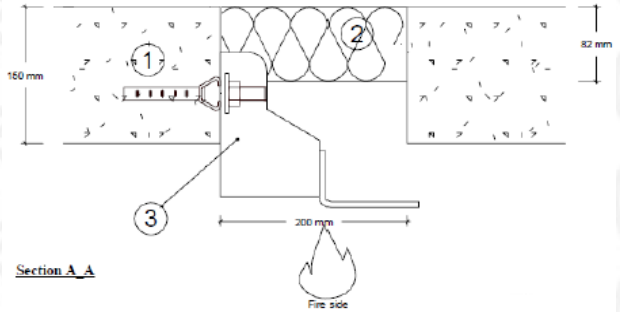

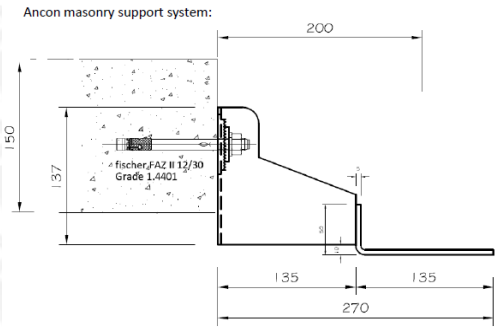

1. 150 mm thick lightweight concrete floor
2. Tenmat NVFB Non-Ventilated Fire Barrier
3. Ancon masonry MDC/P support system

Substrate	Min. Depth (mm)	Seal Material*	Classification
Masonry / concrete	82	Stone mineral wool 110kg/m^3, with or without foil facings, compress fitted by approximately 5 mm. With or without DPC	EI 120 – H – X – F – W 200
			E 120 – H – X – F – W 201 to W 450, EI 30 – H – X – F – W 201 to W 450

*Minor irregularities (≤ 5 mm) on each face to be sealed with PFC Corofil Acoustic Intumescent Sealant to a min. depth of 10 mm.

Appendix UL-EU CERTIFICATE

Linear joint or gap seals with 1 x 82 mm thick Tenmat NVFB Non-Ventilated Fire Barrier, installed within the cavity between rigid floors with thickness of minimum 150 mm and Metsec wall supporting construction

Joint System: Tenmat NVFB Non-Ventilated Fire Barrier compress fitted within the cavity and flush to the bottom side of the floor. The Tenmat NVFB Non-Ventilated Fire Barrier is retained in place using MP Brackets installed at mid depth of the barrier and fixed at maximum 500 mm centres.

Construction details:

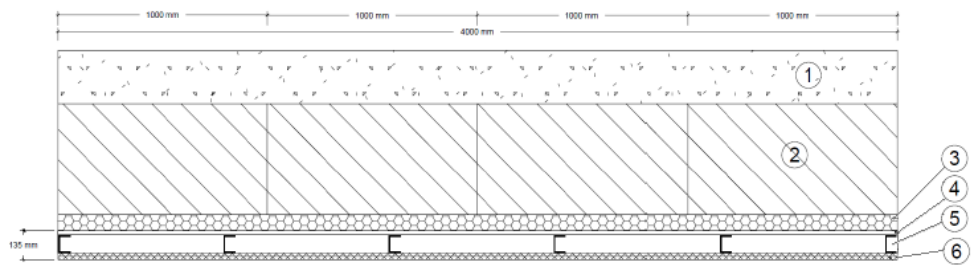

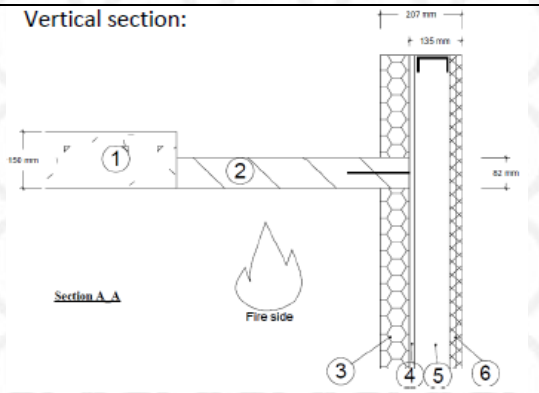

1. 100 mm leightweight aggregate floor
2. Tenmat NVFB Non-Ventilated Fire Barrier
3. Minimum 75 mm Rockwool Duo Slab
4. 1 x 12 mm RCM Y-Wall
5. 90 mm Metsec C stud
6. 2 x 15mm Knauf Fire Panel

Substrate	Min. Depth (mm)	Seal Material*	Classification
Masonry / Concrete / Metsec system	82	Stone mineral wool 110kg/m^3, with or without foil facings, compress fitted by approximately 5 mm. Fixed with MP Brackets at maximum 500 mm centres.	E 120 – H – X – F – W 10 to W 595, EI 60 – H – X – F – W 10 to W 595

*Minor irregularities (≤ 5 mm) on each face to be sealed with PFC Corofil Acoustic Intumescent Sealant to a min. depth of 10 mm.

Appendix UL-EU Certificate

Certification Mark	**UL-EU mark**
Certificate No.	UL-EU-01265-CPR
Page	12/12
Date of Issue	2022-11-30

The UL-EU Mark, as displayed below, shall appear on certified products only. Minimum size is not specified, as long as the Mark is legible. The following is suggested.

The minimum height of the registered trademark symbol ® shall be 1 mm. When the overall diameter of the UL-EU Mark is less than 9.5 mm, the trademark symbol may be omitted if it is not legible to the naked eye.

The UL-EU Mark may appear on a label, nameplate, or may be cast, stamped or molded into the product. When appearing on a label or nameplate, the Manufacturer's name or trademark along with a model number are also required on that same label or nameplate. If cast, stamped or molded, the Manufacturer's name or trademark and model number shall also appear elsewhere on the product.

All content shall be in accordance with the details provided on this UL-EU Certificate.

PROCUREMENT

The Production site may reproduce the Mark or obtain it from a UL authorized supplier. The list of UL authorized suppliers can be found on UL's online directory at www.ul.com.